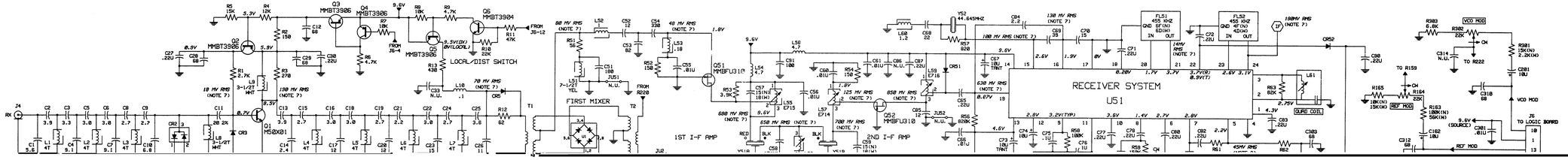
LOCAL/DIST SWITCH
FIRST MIXER
1ST I-F AMP
2ND I-F AMP
RECEIVER SYSTEM
U51
QUAD COIL
VCO MOD
REF MOD
TO LOGIC BOARD
TO R159
TO R222
FROM J6-12
FROM J6-4
FROM R220
MMBT3906
MMBT3904
MMBFU310
MS0X01
FL51
FL52
455 KHZ
4F(IN)
4D(IN)
IN
OUT
GND
8F(IN)
8D(IN)
YS2
44.645MHZ
J4
RX
J5
J6
J8
J2
T1
T2
L51
L52
L53
L54
L55
L56
L57
L58
L59
L61
L62
L63
L64
L65
L66
L67
L68
L69
L70
L71
L72
L73
L74
L75
L76
L77
L78
L79
L80
L81
L82
L83
L84
L85
L86
L87
L88
L89
L90
L91
L92
L93
L94
L95
L96
L97
L98
L99
L100

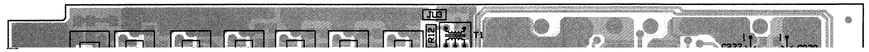

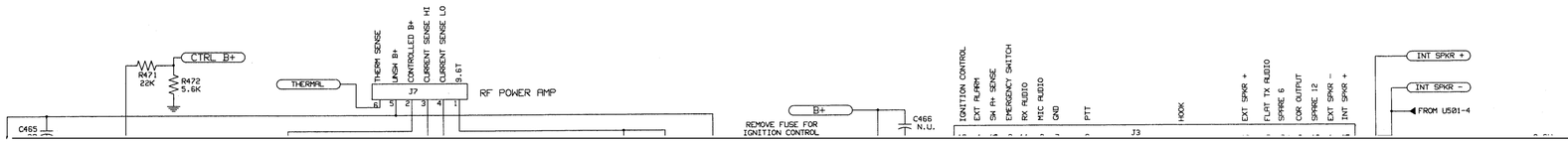
CTRL B+
R471
22K
R472
5.6K
THERMAL
THERM SENSE
UNSW B+
CONTROLLED B+
CURRENT SENSE HI
CURRENT SENSE LO
9.6T
J7
RF POWER AMP
C465
B+
REMOVE FUSE FOR
IGNITION CONTROL
C466
N.U.
IGNITION CONTROL
EXT ALARM
SW B+ SENSE
EMERGENCY SWITCH
RX AUDIO
MIC AUDIO
GND
PTT
J3
HOOK
EXT SPKR +
FLAT TX AUDIO
SPARE 6
COR OUTPUT
SPARE 12
EXT SPKR -
INT SPKR +
INT SPKR +
INT SPKR -
FROM U501-4

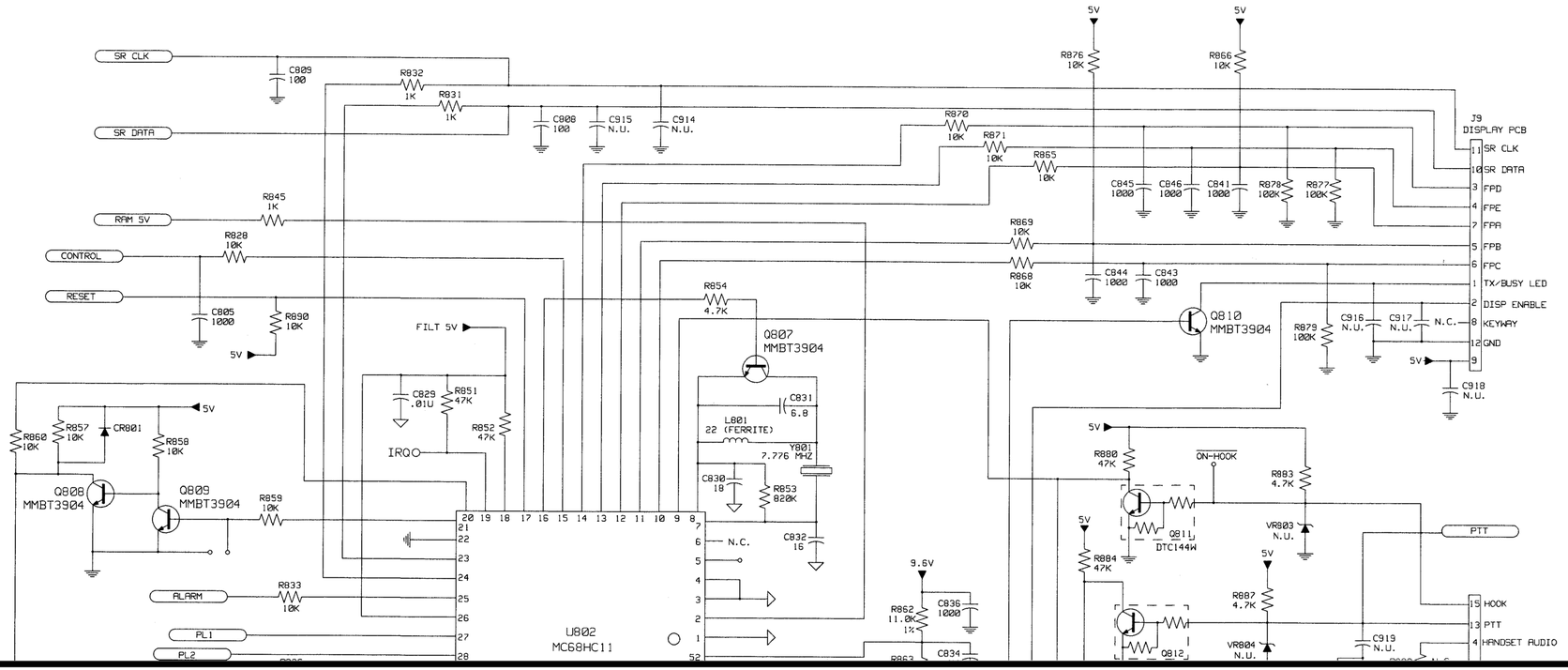
SR CLK
SR DATA
RAM 5V
CONTROL
RESET
ALARM
PL1
PL2
FILT 5V
IRQ
5V
9.6V
C809 100
R832 1K
R831 1K
C808 100
C915 N.U.
C914 N.U.
R845 1K
R828 10K
C805 1000
R890 10K
R860 10K
R857 10K
CR801
R858 10K
Q808 MMBT3904
Q809 MMBT3904
R859 10K
R833 10K
C829 .01U
R851 47K
R852 47K
R854 4.7K
Q807 MMBT3904
C831 6.8
L801 22 (FERRITE)
Y801 7.776 MHZ
C830 18
R853 820K
C832 15
N.C.
U802 MC68HC11
R876 10K
R866 10K
R870 10K
R871 10K
R865 10K
R869 10K
R868 10K
C845 1000
C846 1000
C841 1000
R878 100K
R877 100K
C844 1000
C843 1000
Q810 MMBT3904
R879 100K
C916 N.U.
C917 N.U.
N.C.
C918 N.U.
J9 DISPLAY PCB
SR CLK
SR DATA
FPD
FPE
FPA
FPB
FPC
TX/BUSY LED
DISP ENABLE
KEYWAY
GND
R880 47K
ON-HOOK
R883 4.7K
Q811 DTC144W
VR803 N.U.
PTT
R884 47K
R887 4.7K
Q812
VR804 N.U.
C919 N.U.
HOOK
PTT
HANDSET AUDIO
R862 11.0K 1%
C836 1000
C834

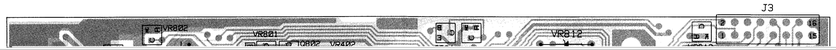
J3
VR802
VR801
VR812

CTRL B+
R472
2.5K
THERMAL
THERM SENSE
HIGH B+
CONTROLLED B+
CURRENT SENSE HI
CURRENT SENSE LO
B-ST
J7
RF POWER AMP
B+
NITION CONTROL
T FLASH
T IN SENSE
RADIO SWITCH
RADIO
C RADIO
D
C PTT
OG I/O 14
T SPKR -
T TX RADIO
XG I/O 8
XG I/O 12
T SPKR -
T SPKR +
INT SPKR +
INT SPKR -

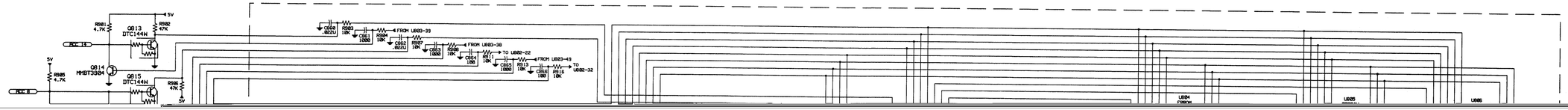
5V
R801
4.7K
R802
47K
Q813
DTC144H
PCK 14
5V
Q814
MMBT3904
R805
4.7K
Q815
DTC144H
R806
47K
5V
PCK 8
C810
.0022U
R803
10K
C811
1000
FROM U803-39
R804
10K
C812
.0220
R807
10K
C813
1000
FROM U803-38
R808
10K
C814
100
TO U802-22
R811
10K
C815
1000
FROM U803-49
R810
10K
C816
100
TO
U802-32
R816
10K
U804
U805
U806

J3
LB02
LB03
RCCYB
Q801
VR801
VR802
R801
Q812
CR403