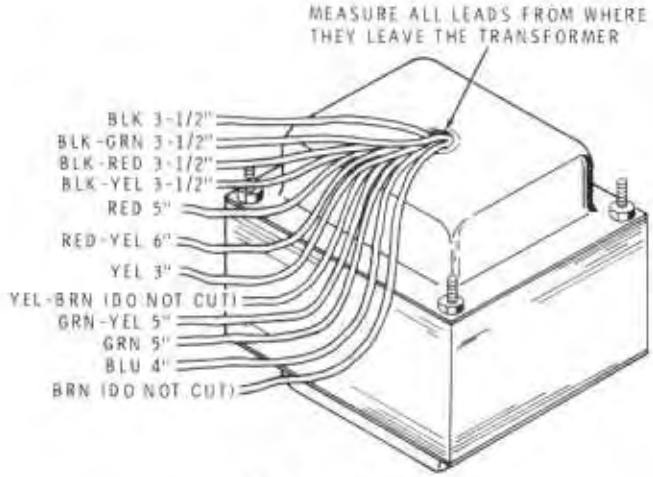

Detail 1F

NOTE: Use the scale on the fold-out from Page 9 for measuring wires in the following step.

( ) Refer to Detail 1F and cut the Power Transformer leads to the following lengths (measured from where they leave the transformer):

WIRE COLOR	LENGTH
Black	3-1/2"
Black-green	3-1/2"
Black-red	3-1/2"
Black-yellow	3-1/2"
Red	5"
Red-yellow	6"
Yellow	3"
Yellow-brown	do not cut
Green-yellow	5"
Green	5"
Blue	4"
Brown	do not cut

( ) Remove 1/4" of insulation from the end of each cut transformer lead, and melt a small amount of solder on the bared end to hold the wire strands together.

( ) Mount the power transformer in the large cutout on the chassis as shown in Detail 1G. Use #8 lockwashers and 8-32 nuts.

( ) Refer to Detail 1H and install 125 μF tab-mount electrolytic capacitors in the mounting wafers at F, G, H, and K. Insert the capacitor lugs into the wafers, making sure that the connecting lug of each capacitor is oriented as shown on the Pictorial. Then twist each mounting lug 1/8 turn.

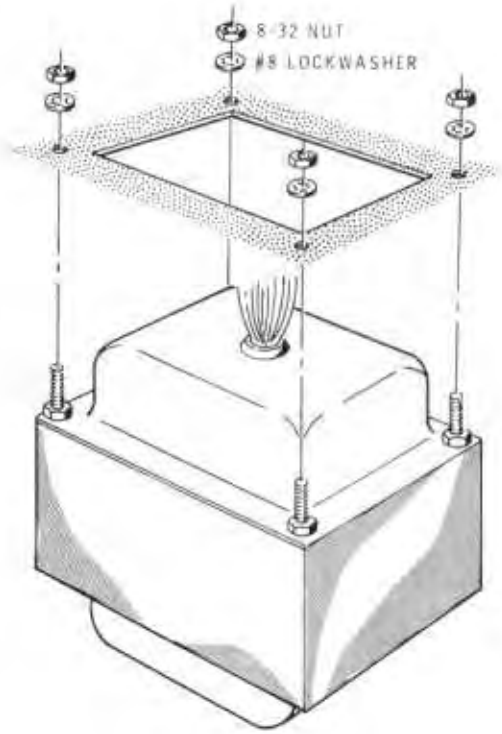

Detail 1G

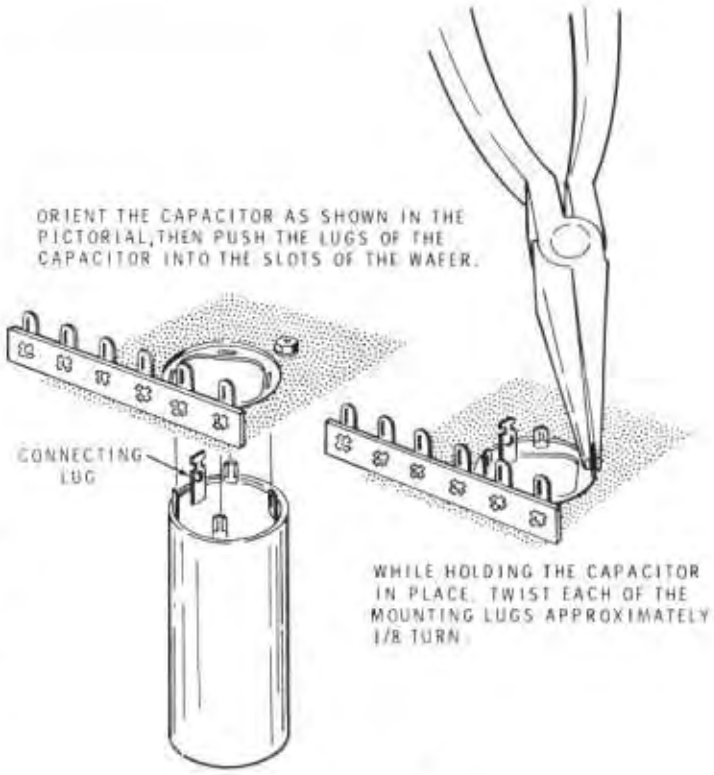

Detail 1H

SPECIFICATIONS

HIGH VOLTAGE SUPPLY

Output Voltage	820 volts DC, no load. 700 volts DC at 250 mA.
Effective Output Capacitance	62.5 μF.
Ripple	Less than 1% at 250 mA.
Duty Cycle	Continuous up to 150 mA. 50% at 300 mA.

LOW VOLTAGE SUPPLY (high tap)

Output Voltage	350 volts DC, no load. 300 volts DC at 150 mA (with 100 mA load on High Voltage).
Ripple	Less than .05% at 150 mA.
Duty Cycle	Continuous up to 175 mA.

LOW VOLTAGE SUPPLY (low tap)

Output Voltage	275 volts DC, no load. 250 volts DC, at 100 mA (with 100 mA load on High Voltage).
Ripple	Less than .05% at 150 mA.
Duty Cycle	Continuous up to 175 mA.

OTHER OUTPUT VOLTAGES

Fixed Bias	-130 volts DC, no load. -100 volts DC, at 20 mA.
Adjustable Bias	-80 to -40 volts DC, at 1 mA maximum.
Filaments	6.3 volts AC at 11 amperes. 12.6 volts AC at 5.5 amperes.

GENERAL

Power Requirements	120/240 volts AC, 50/60 Hz, 350 watts maximum.
Dimensions	9" long x 4-3/4" wide x 6-3/4" high.
Net Weight	16 lbs.

The Heath Company reserves the right to discontinue instruments and to change specifications at any time without incurring any obligation to incorporate new features in instruments previously sold.

Heath HP23A manual from N4JK Art Driggers Destin, FL
Converted to PDF format by K1BI, Saul Dinman, Waquoit, MA